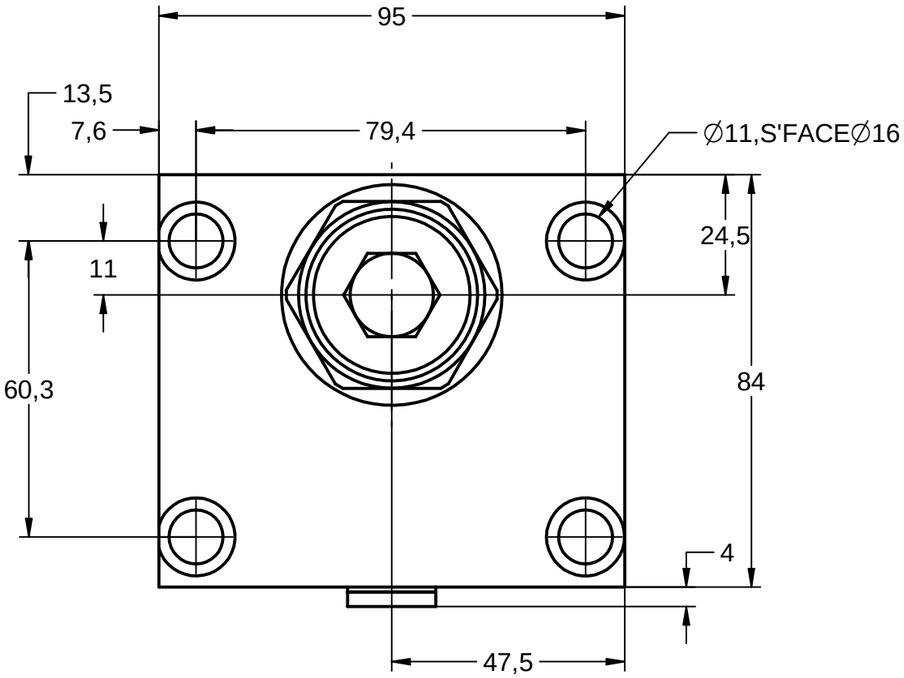

FLUID POWER SYMBOL

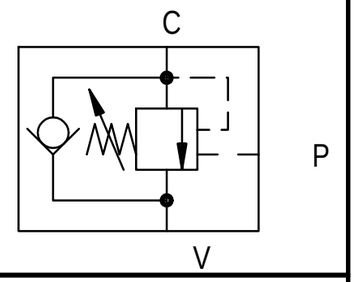

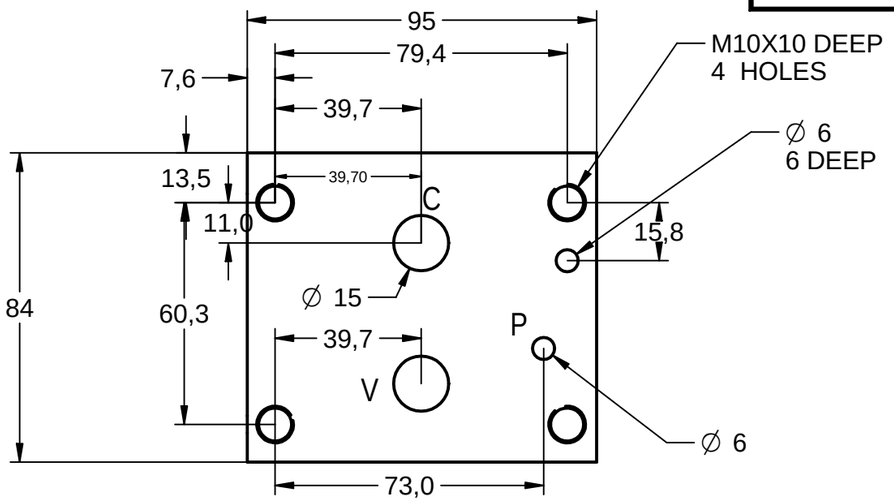

SUBPLATE DIMENSIONS

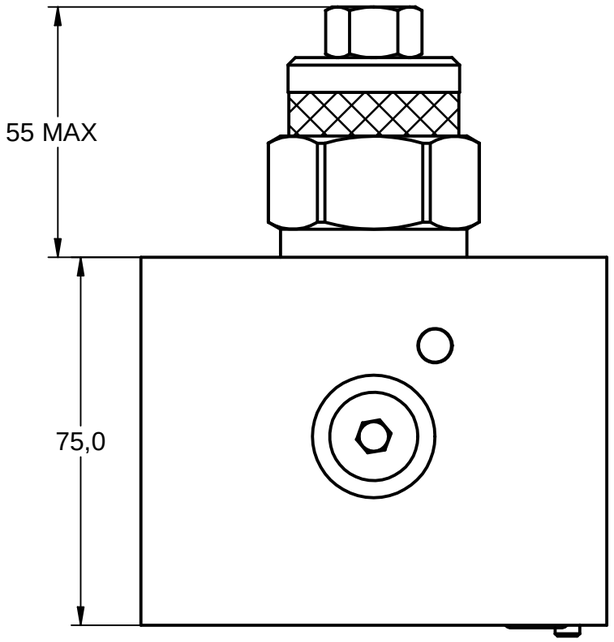

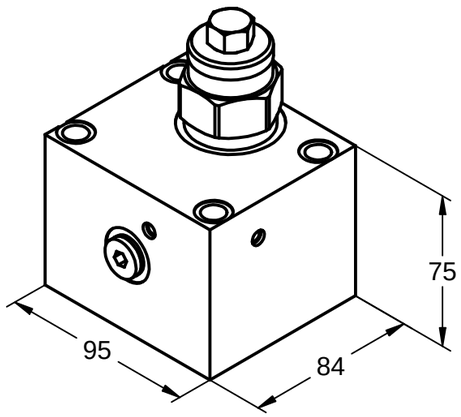

MODEL CODE

CEG150 P 35S3

BOLT KIT M10X80 4NOS VALVE WEIGHT 4.6 KG

Tucson Hydrocontrols

C1B 246/5 GIDC Estate, Umbergaon
Gujarat 39 6171

DRAWN PVD	CHKD MJ	**DATA SHEET CEG150**
APRVD PVD	DATE	
SCALE		DATA SHEET NO **040 360**

TS006