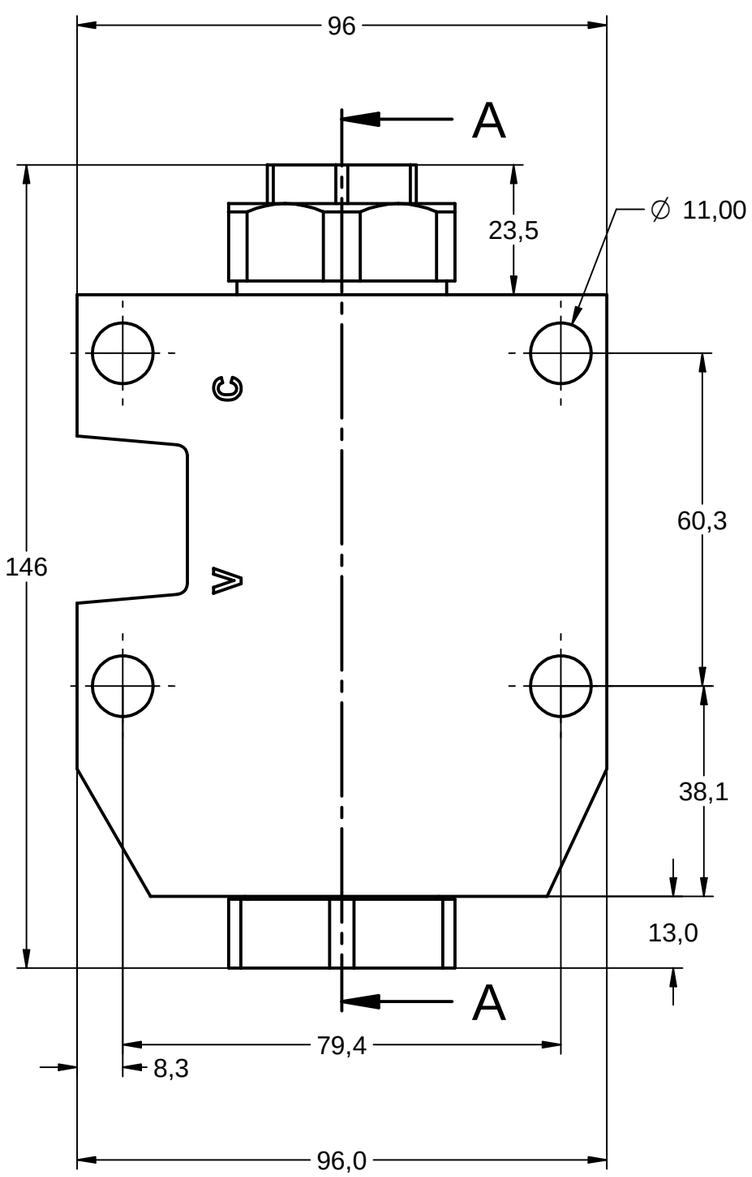

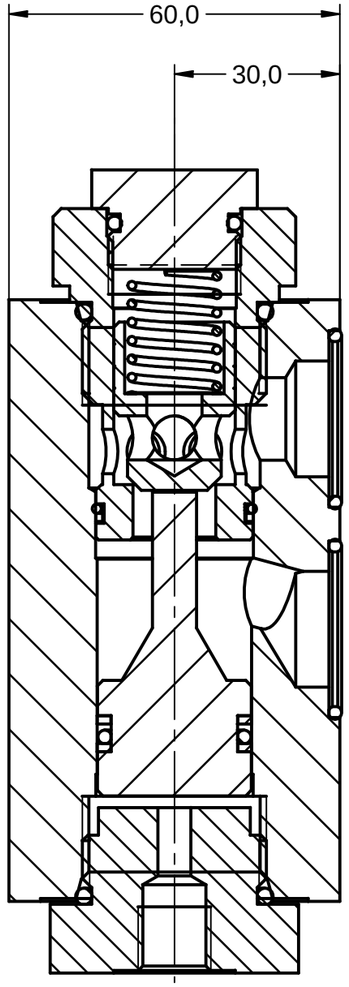

SECTION A-A

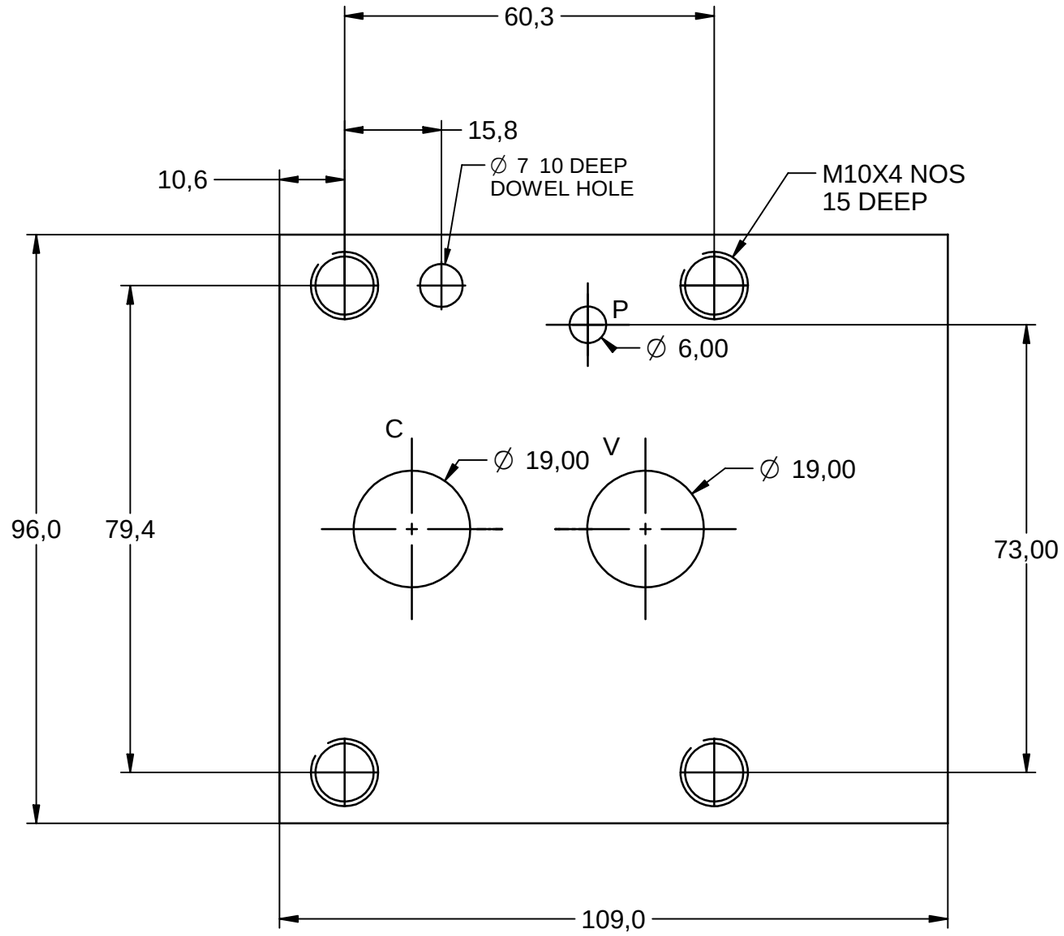

SUBPLATE DIMENSIONS

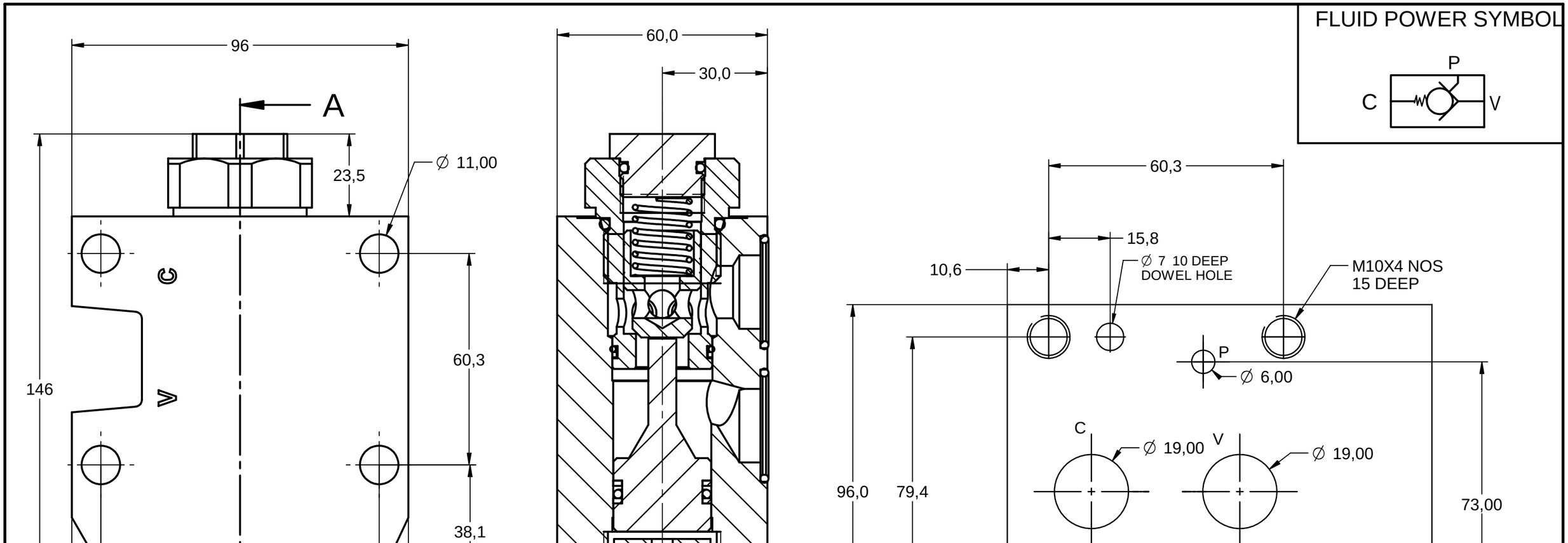

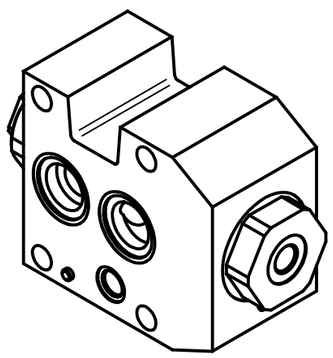

MODEL CODE: PCG21

VALVE WEIGHT 5 KG

SPECIFICATION

MAX FLOW:	**150LPM**
MAX PRESSURE:	**300 BAR**
PILOT RATIO:	**3**
FLUID:	**MINERAL OIL**
TEMP:	**90 DEG C**
SEALS:	**NITRILE**

TS003

Tucson Hydrocontrols
C1B 246/5 GIDC Estate, Umbergaon
Gujarat 39 6171

DRAWN PVD	CHKD RJPD	**DATA SHEET PCG21**	
APRVD PVD	DATE 07/07		
SCALE		DATA SHEET NO	**050 220**